Nüdel™ KART

GOOD DESIGN AWARD® WINNER

GOOD DESIGN AWARD® GOLD WINNER

PACK UP MANUAL

Adult Assembly required

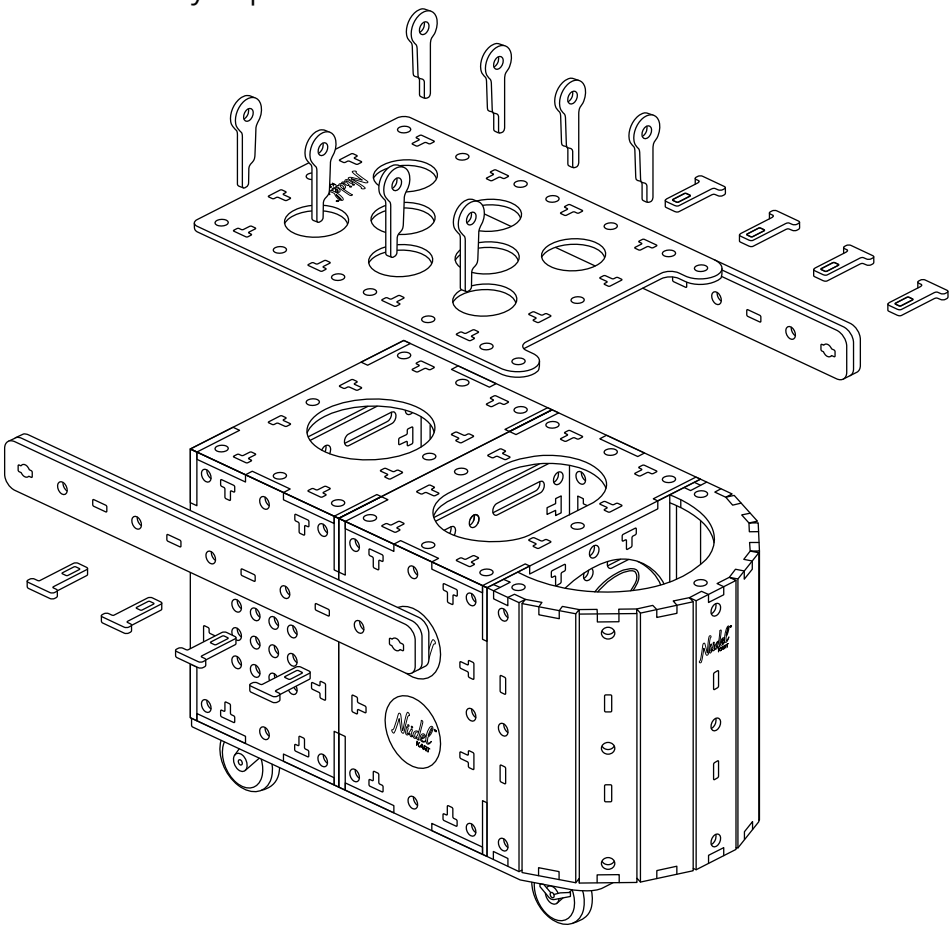

This product complies with:
INTERNATIONAL SAFETY STANDARDS (ASTM F963, EN71)
✔USA ✔EUROPE ✔AUSTRALIA
Designed in accordance with:
INTERNATIONAL TOY & PLAYGROUND SAFETY STANDARDS
(AS4685, ISO 8124, ASTM F1487-17)

©2020 Nüdel Kart™ by Playground Ideas. Reg. Des. 201911229

Important Information

Full safety information is contained within the Supervisor's Manual. Before building, using, or leading a class you are required to review the Supervisor's Manual for relevant guidance regarding safe usage and oversight of the Nüdel Kart.

General Safety Information

Warning: This product can cause injury if not used safely. Supervise children at all times with people who are appropriately qualified to work with children

For the purpose of this document, and anytime we refer to a "Supervisor", we mean anyone that is trained and authorised to work with children. They may also be referred to as a teacher, early childhood educator, playworker, or facilitator.

The Nüdel Kart is designed to create a challenging environment for groups of children and is reconfigurable in many different ways. Some of those configurations may not be appropriate for your children's skill level and the environment that the Nüdel Kart is used in. At all times adult supervision and discretion is to be used to assess if the child is safe or if additional support or intervention is required.

- Adult assembly required.
- Nüdel Kart has been designed for children aged 3-12 years. It is not suitable for children under 3 years of age and children under the age of 3 should not be permitted to engage in play with the Nüdel Kart.
- Take into consideration the maximum number of users (30).
- Take into consideration the maximum weight restrictions (100kg unless marked).
- The Nüdel Kart can be used indoors or outdoors in dry conditions.
- Use on a flat ground, clear of obstructions.
- Always supervise children and assess risk (Refer to Section 15 of the Supervisor Manual and go to the website here: www.nudelkart.com/rba for more information on Risk Benefit Assessment and access to our template.)
- Active use of the Nüdel Kart must always be supported by the presence of a Supervisor, experienced with leading sessions with children. Always defer to their expertise to advise regarding unsafe situations.
- Before and after play, inspect all parts for signs of visible damage or wear and tear that indicates a broken or weakened part. Damaged parts must be discarded, repaired or replaced.
- We recommend that Supervisors do a general inspection of the kart as it's being unpacked and packed up, but a per piece inspection should occur after every 10 uses. Children can be made to be part of this process.
- Wipe the kart clean at the end of every session.
- You may occasionally need to wash/clean loose parts after a period of play, depending on the play site and weather.
- Serious injury may result as a consequence of not following this information.
- Please keep these instructions for future reference.

Storage
To minimize weathering over time, Nüdel Kart should be stored inside. Choose somewhere that is easy to wheel the kart into, (not up stairs) and ideally, a room or shed that is lockable.

Maintenance
Everything in the Nüdel Kart is easily maintainable. Nüdel Kart is like a car. With regular maintenance it will give you faithful service day after day.

Over time:

- Regularly check your Nüdel Kart and the loose parts inside.
- If something breaks or becomes hazardous, remove it from the play area immediately.

Damaged parts must be discarded, repaired or replaced before reuse. Failure to properly inspect and repair may result in serious injury. Included in your maintenance kit are some simple items to repair your kart. There are drill bits, nuts and bolts, and extra screws, if any parts feel loose or need strengthening from some overly vigorous box jumping adventure.

Your kart comes pre-oiled with a water resistant, natural, non toxic coating to keep the edges strong. You may notice some wax marks on the surface, this is beeswax and will come off over time. If the kart experiences excessive humidity or moisture, the edges may need to be re-oiled.

Please contact us at nudel@playgroundideas.org to purchase additional oil to keep it in great condition for years to come.

You can also restock with Nüdel Kart spare parts.
Contact us at nudel@playgroundideas.org.

The Nüdel Kart is made from certified plywood and treated with a beeswax oil that makes it water resistant. However it should not be left outside overnight and should not be used in the wet.

If something happens to your copy of the pack up manual, you can also find it here: www.nudelkart.com/packup.

HOW TO PACK UP YOUR NÜDEL KART

This is a guide to packing up the Nüdel Kart.

Children enjoy the challenge of rebuilding a Nüdel Kart – they should always be a part of the rebuilding process. After the first session, children should be able to lead this process and take ownership over the assembly of the kart.

Keep Aside...

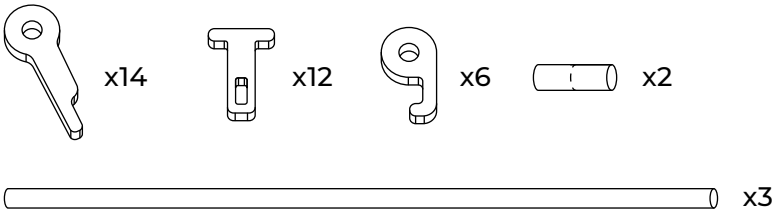

You will need these pieces for steps 2 to 14

01.

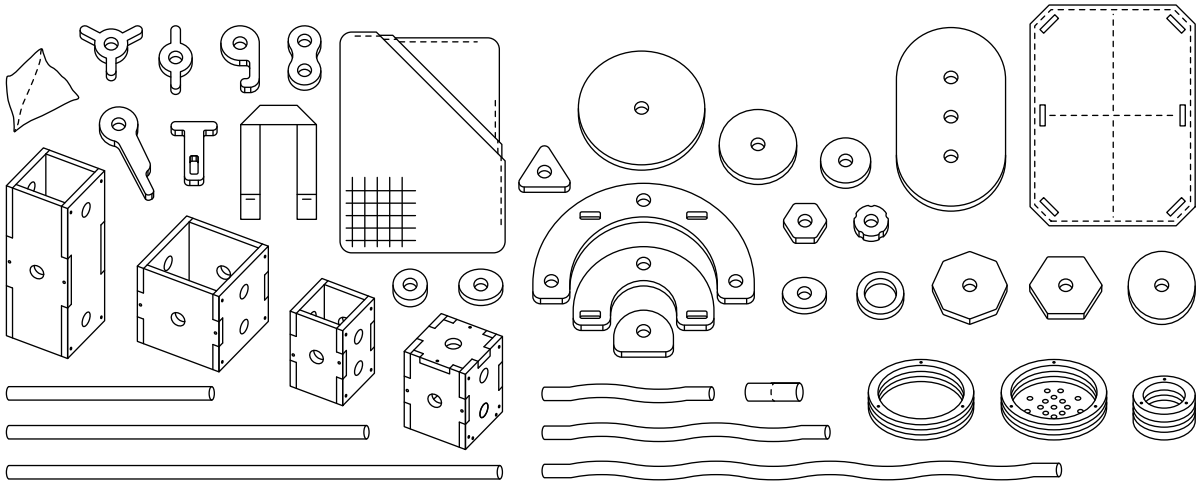

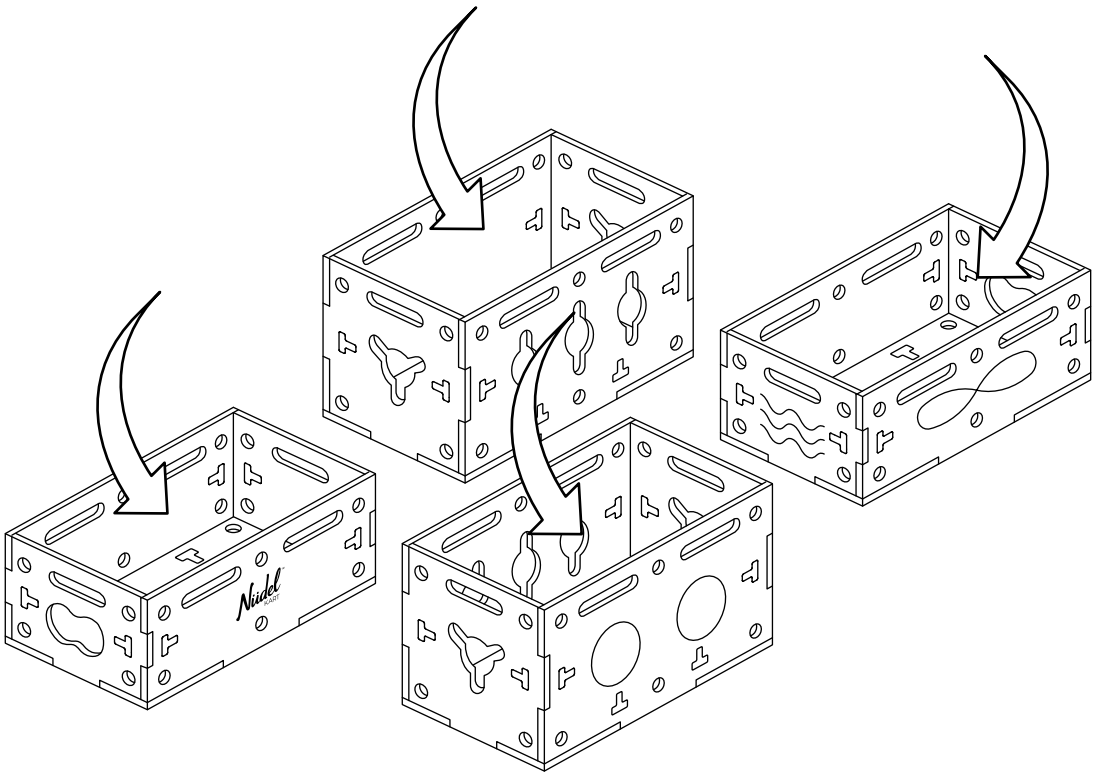

02.

a.

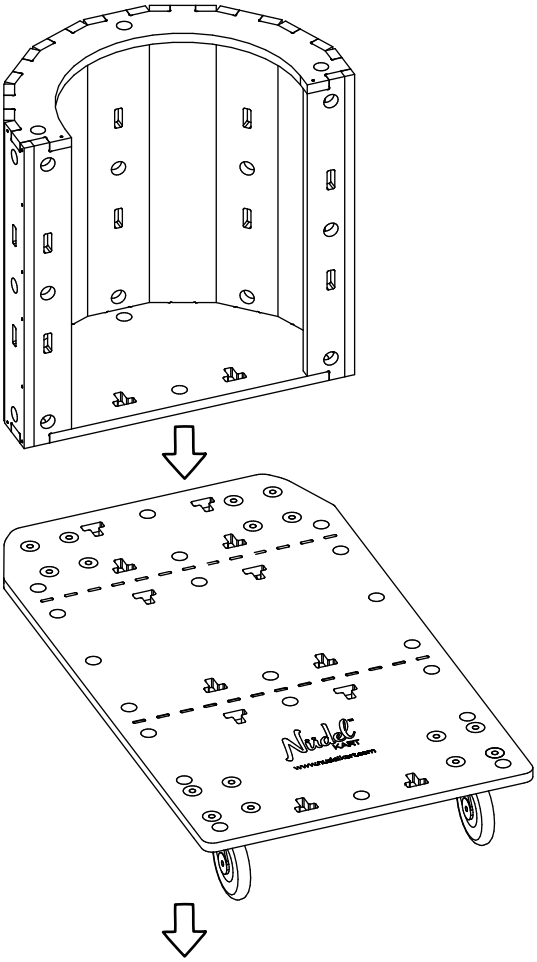

b.

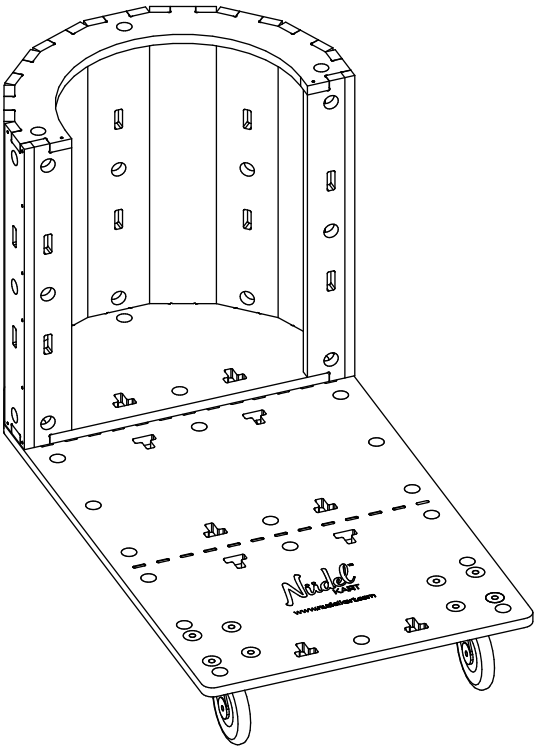

03.

x2

a.

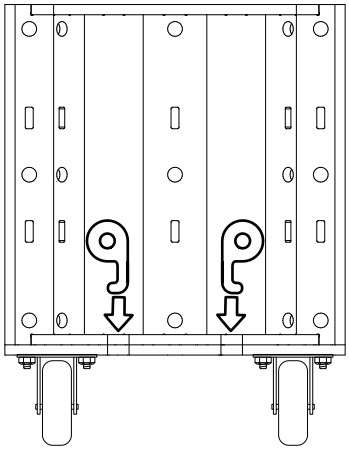

b.

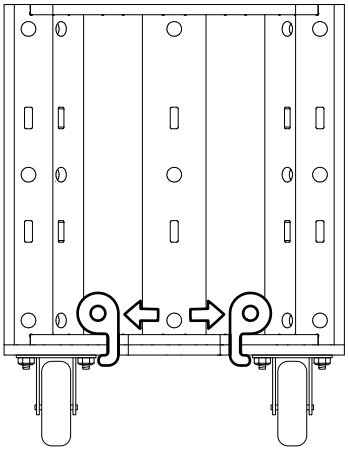

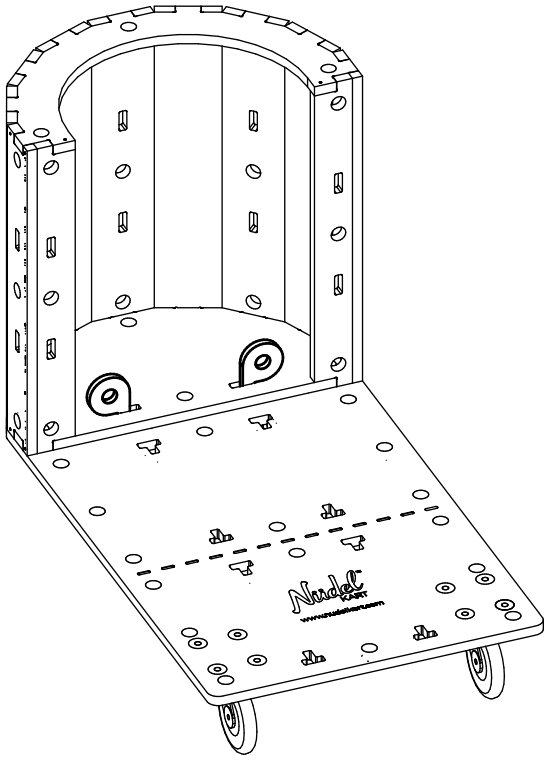

04.

x2

a.

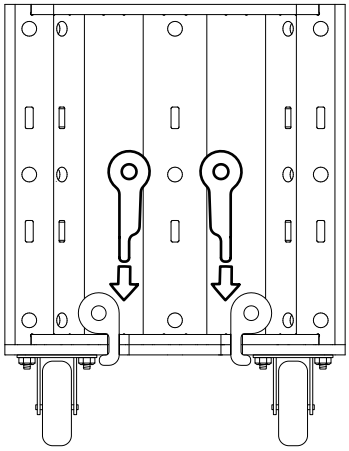

b.

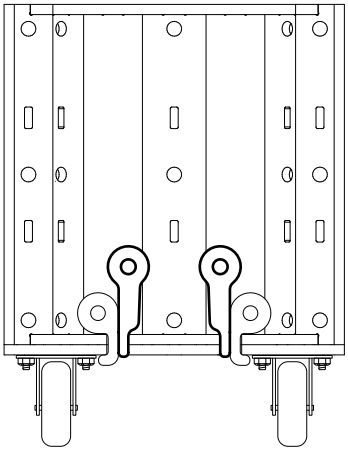

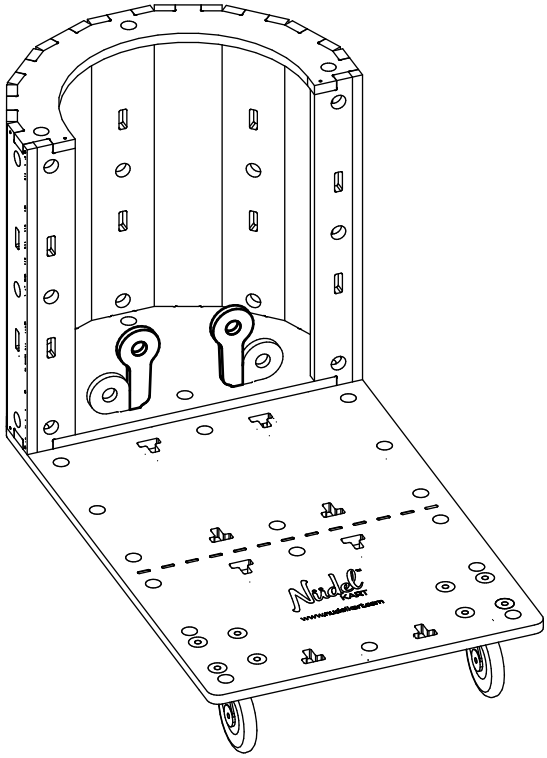

05.

a.

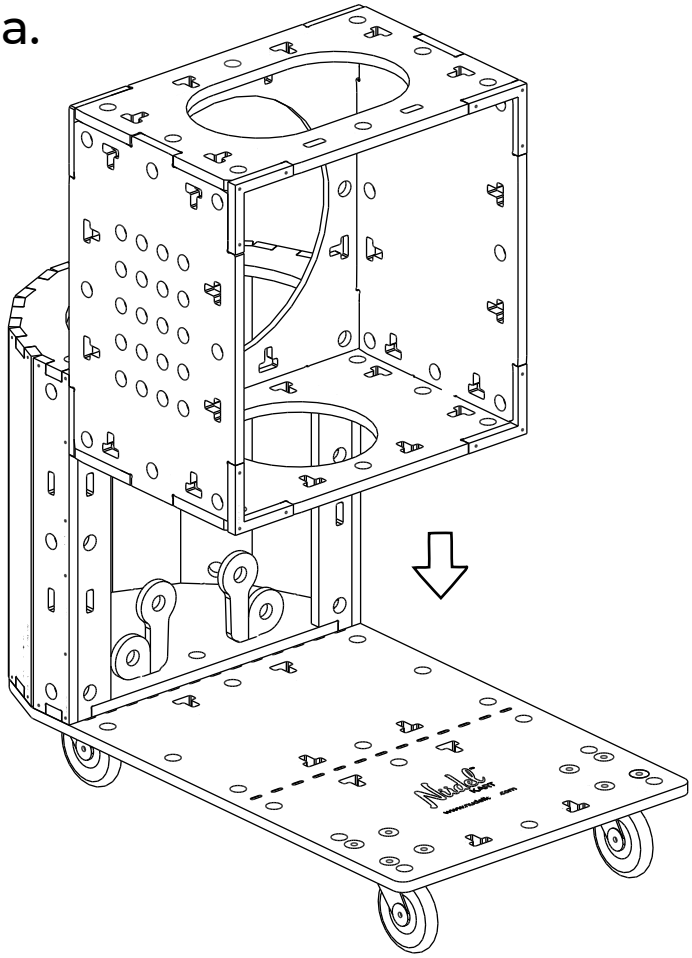

b.

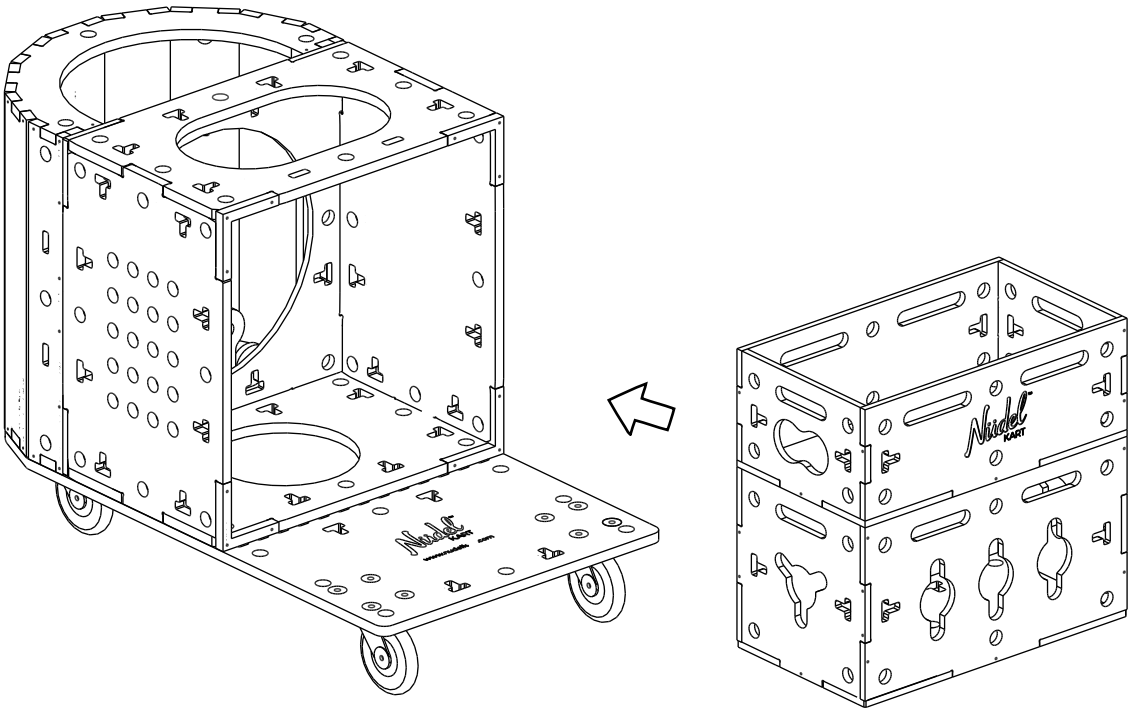

06.

x2

a.

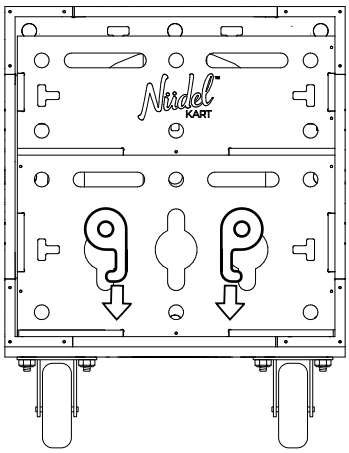

b.

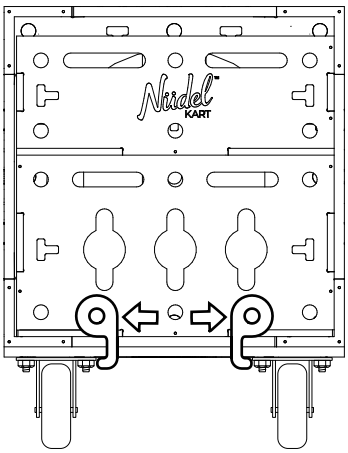

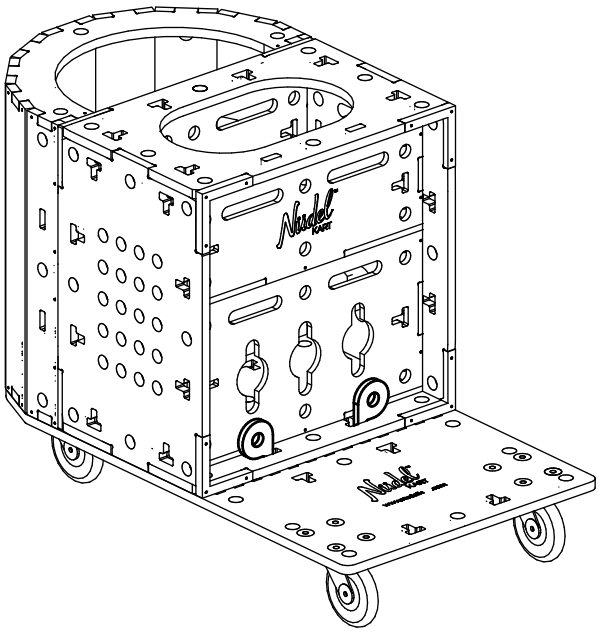

07.

x2

a.

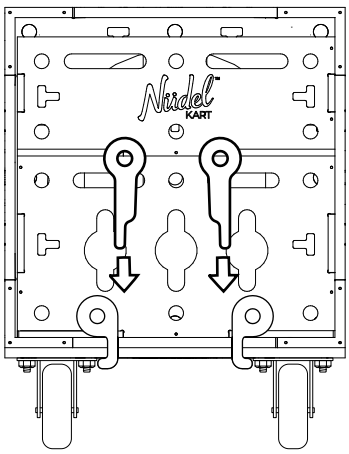

b.

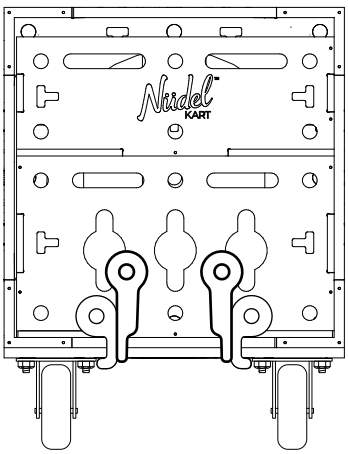

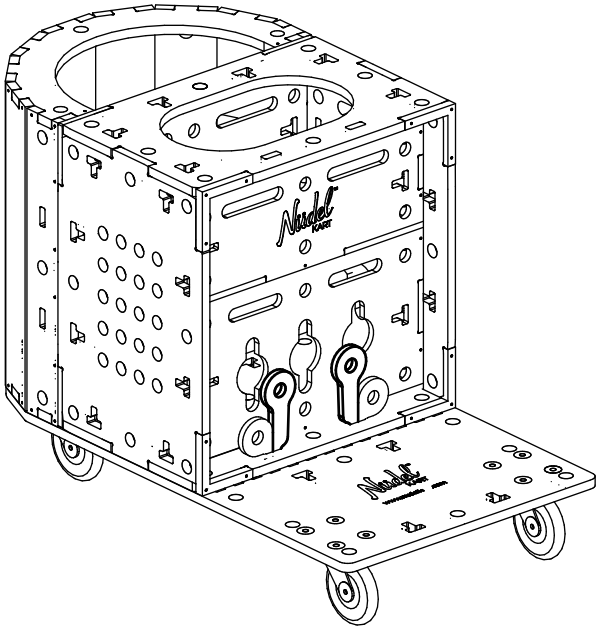

08.

a.

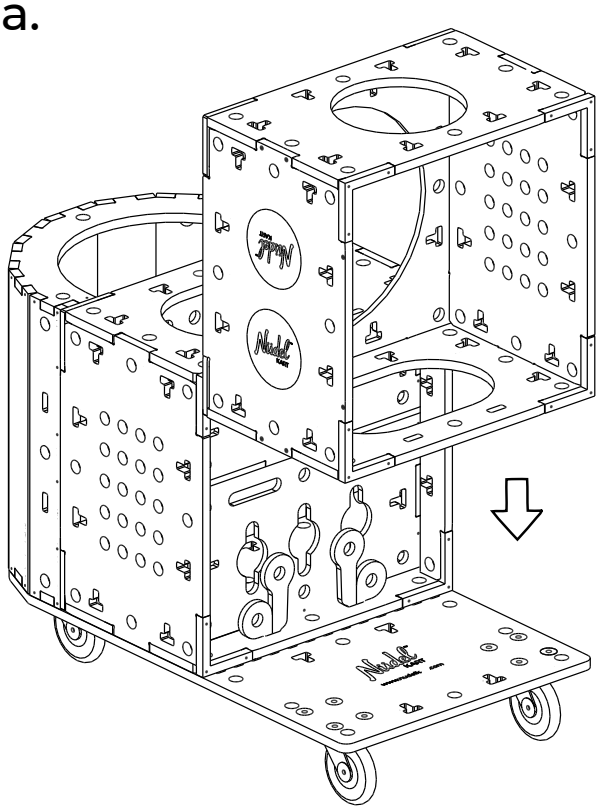

b.

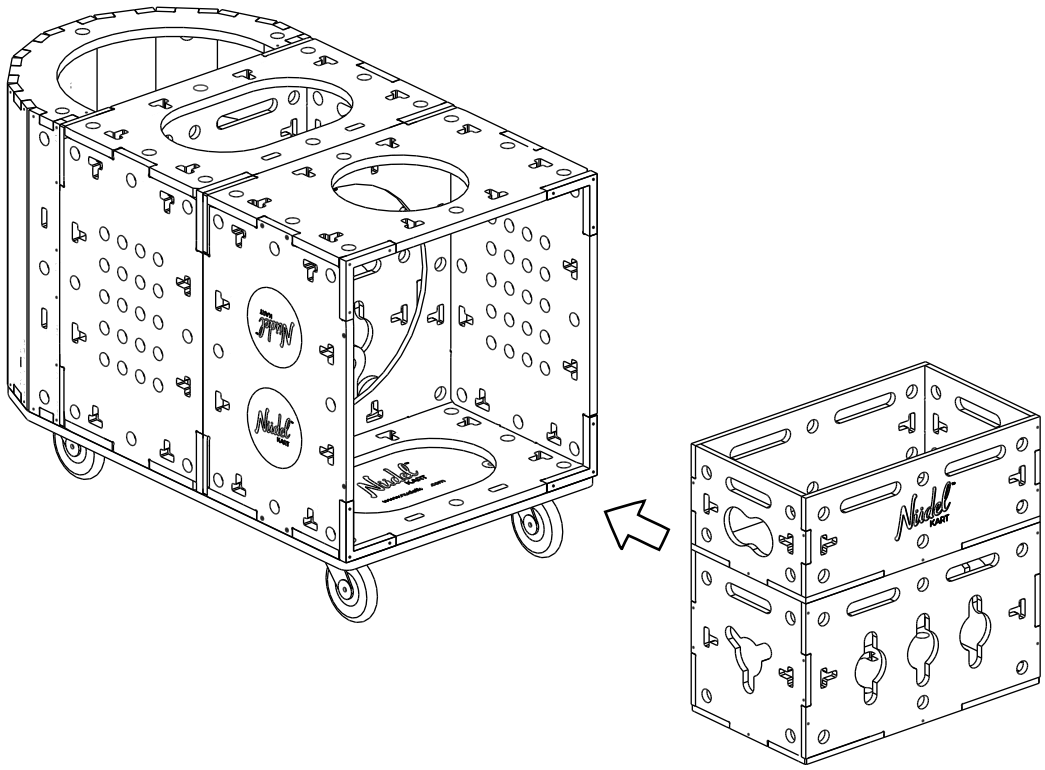

09.

x2

a.

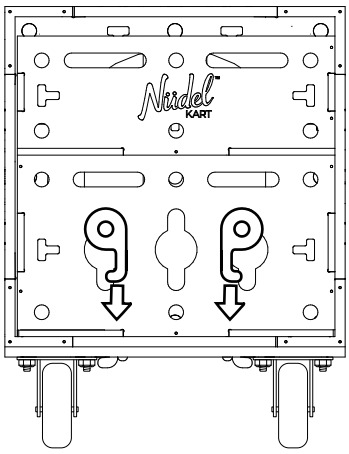

b.

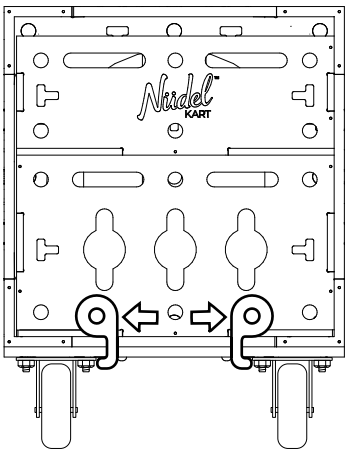

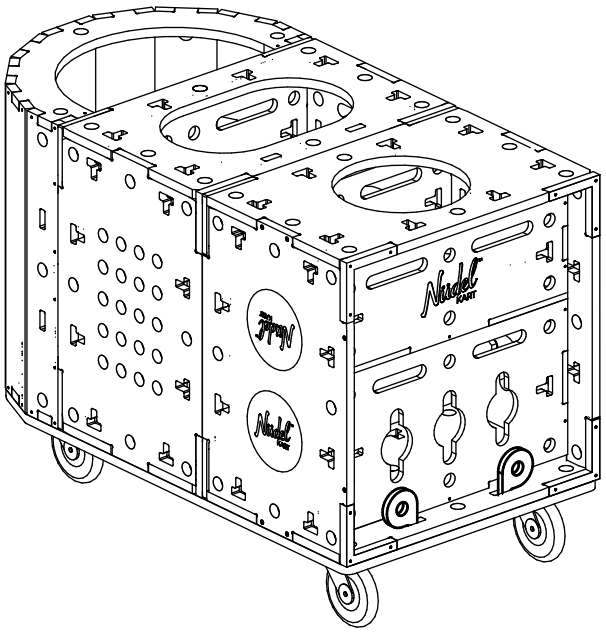

10.

x2

a.

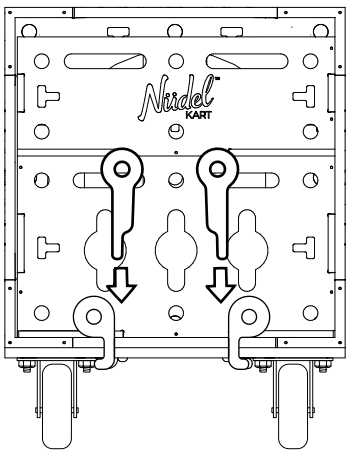

b.

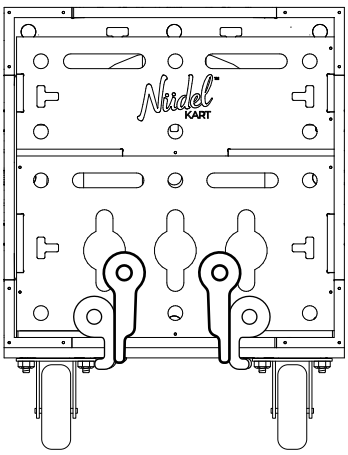

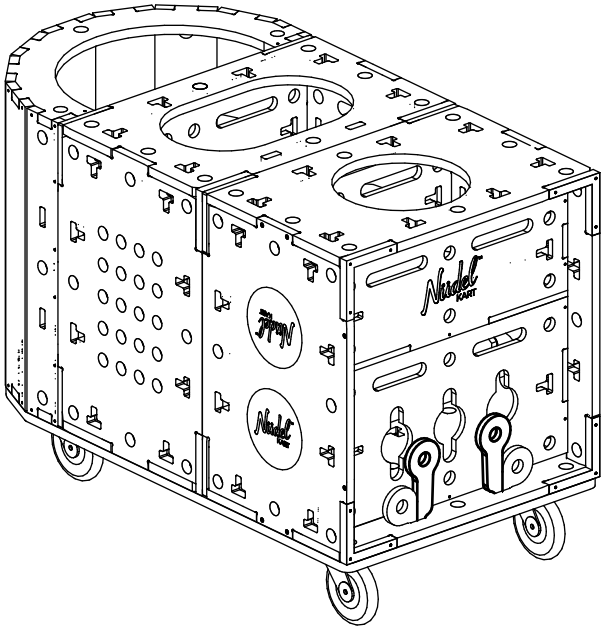

11.

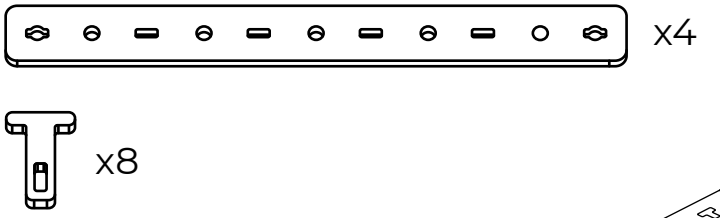

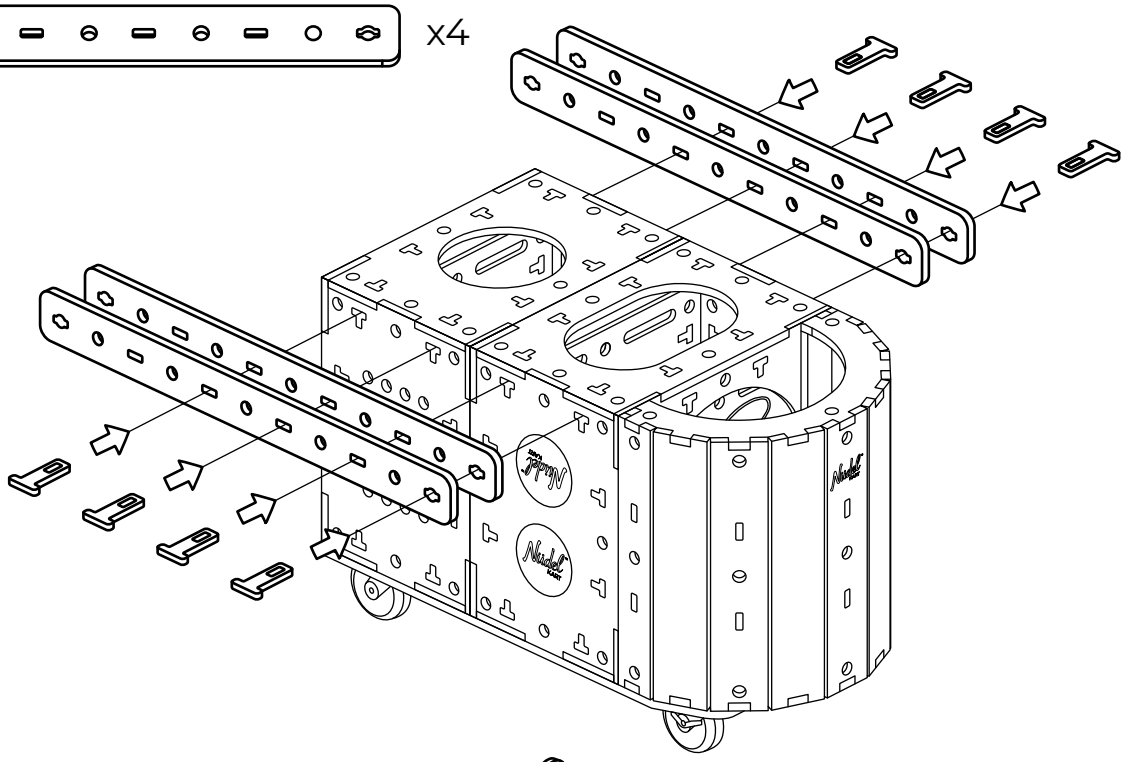

12.

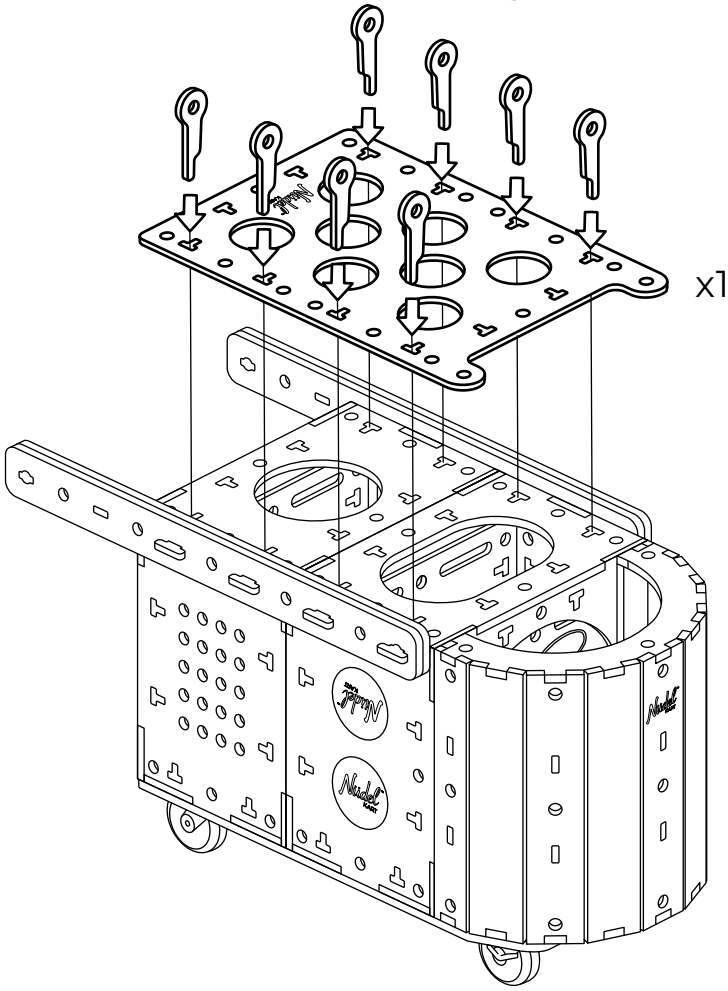

13.

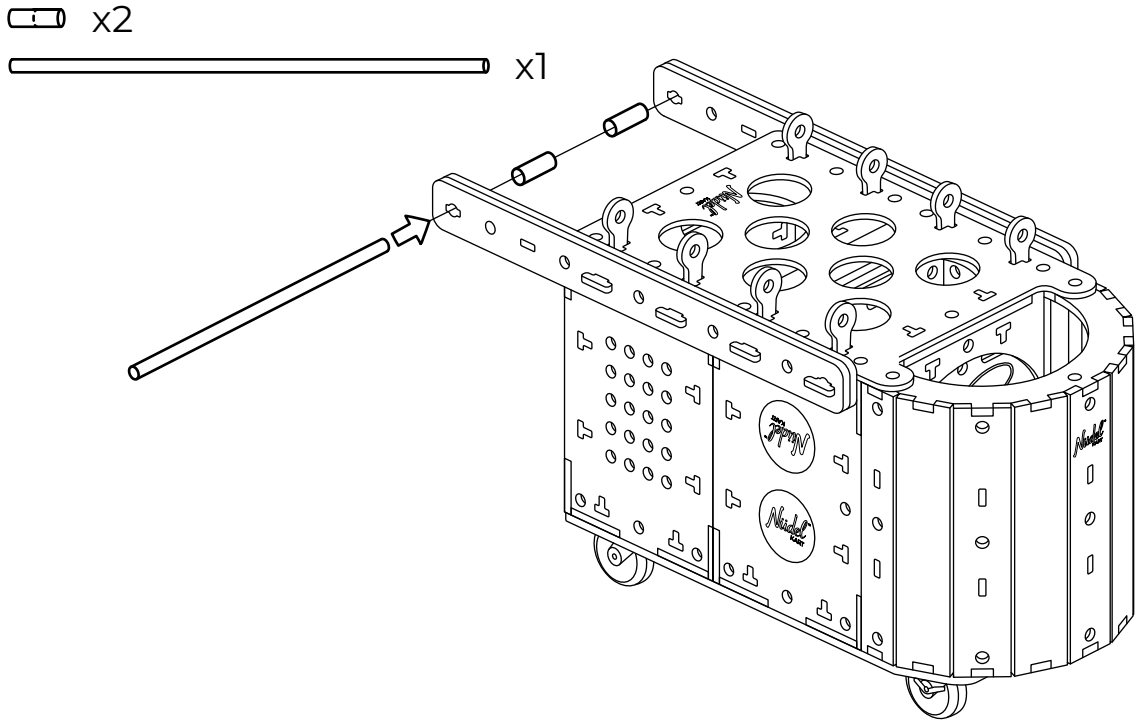

14.

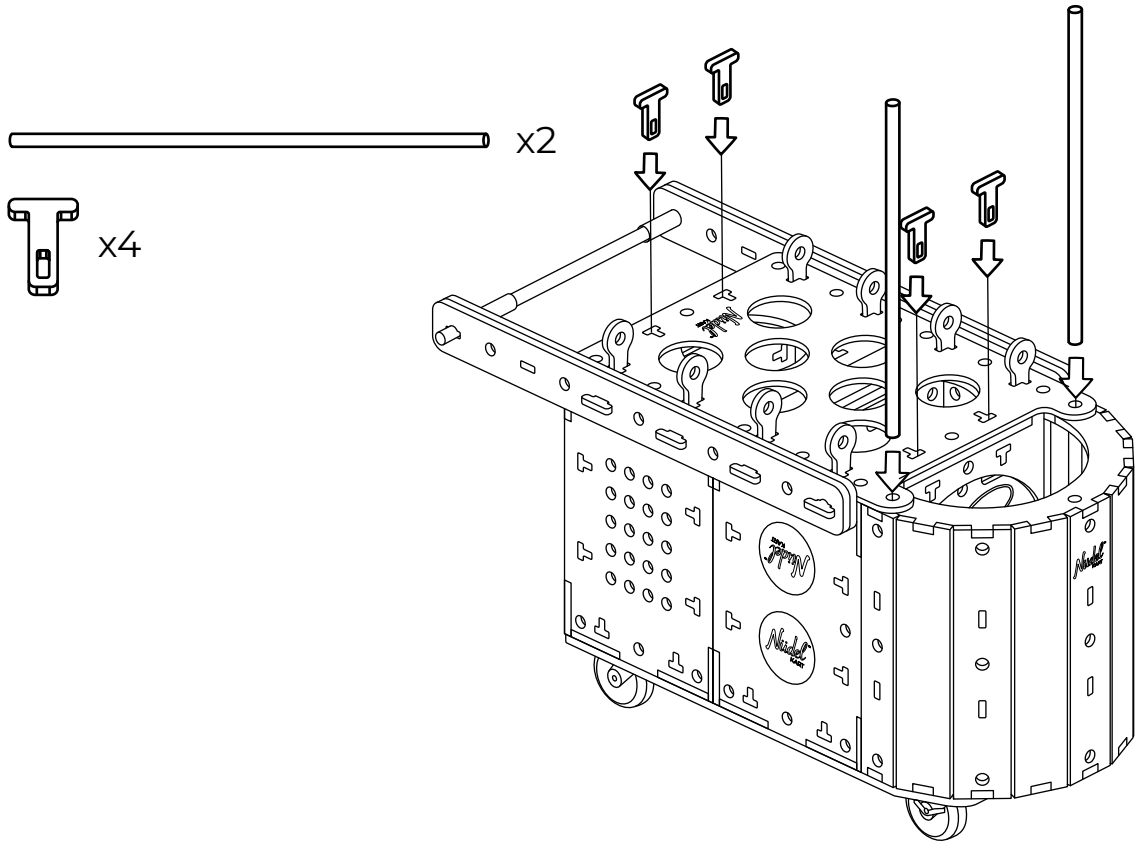
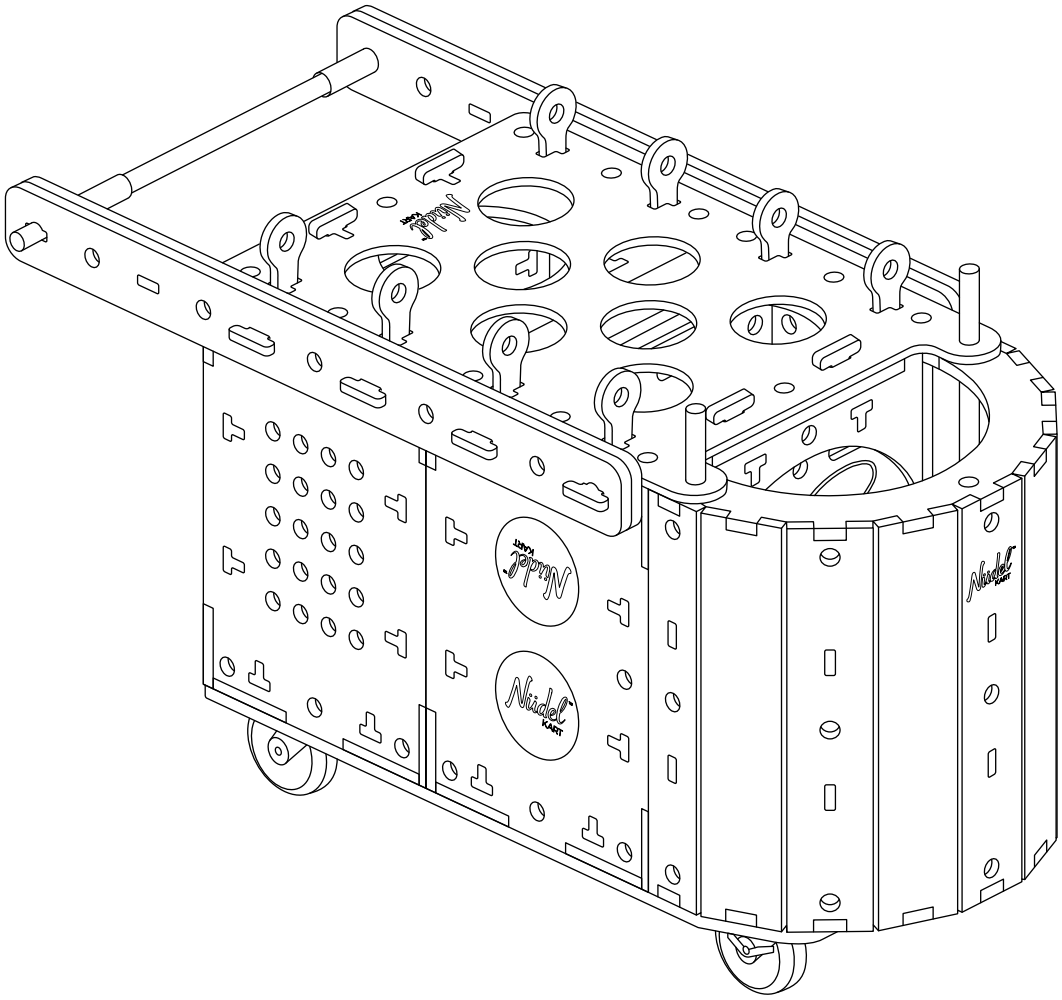
15.